VICTORIAN
collection

Victorian Corner basin

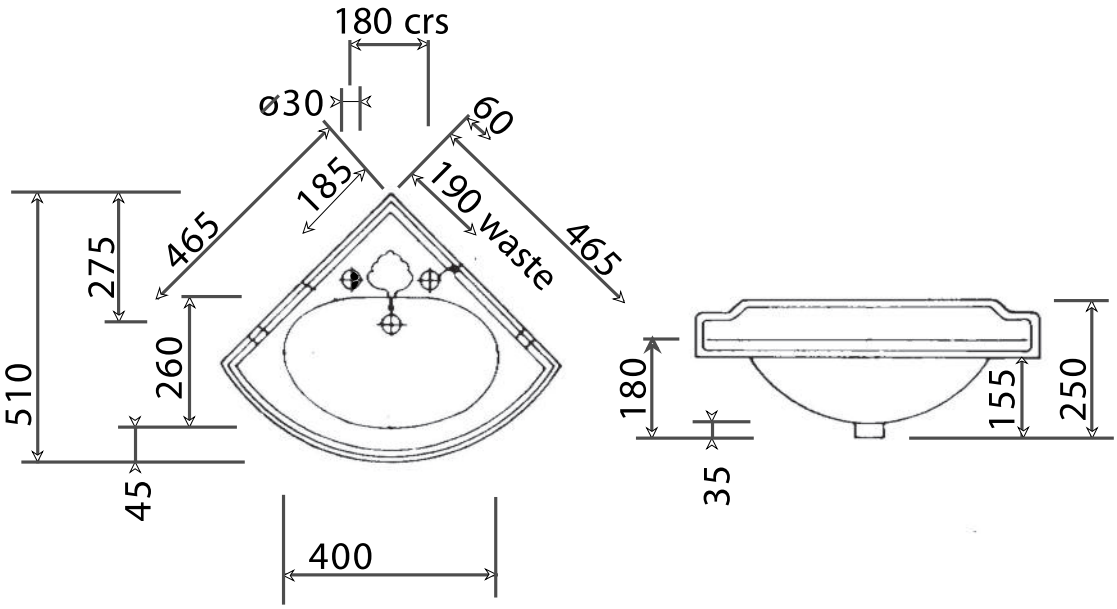

Silverdale Bathrooms Ltd
B.C Sanitan, Silverdale Road, Newcastle Under Lyme, Staffordshire, ST5 6EL.
Telephone: 01782 717175 Facsimile: 01782 717166
Email: sales@silverdalebathrooms.co.uk
www.bcsanitan.co.uk www.silverdalebathrooms.co.uk

SILVERDALE
UK Manufacturers of Luxury Ceramic Brands