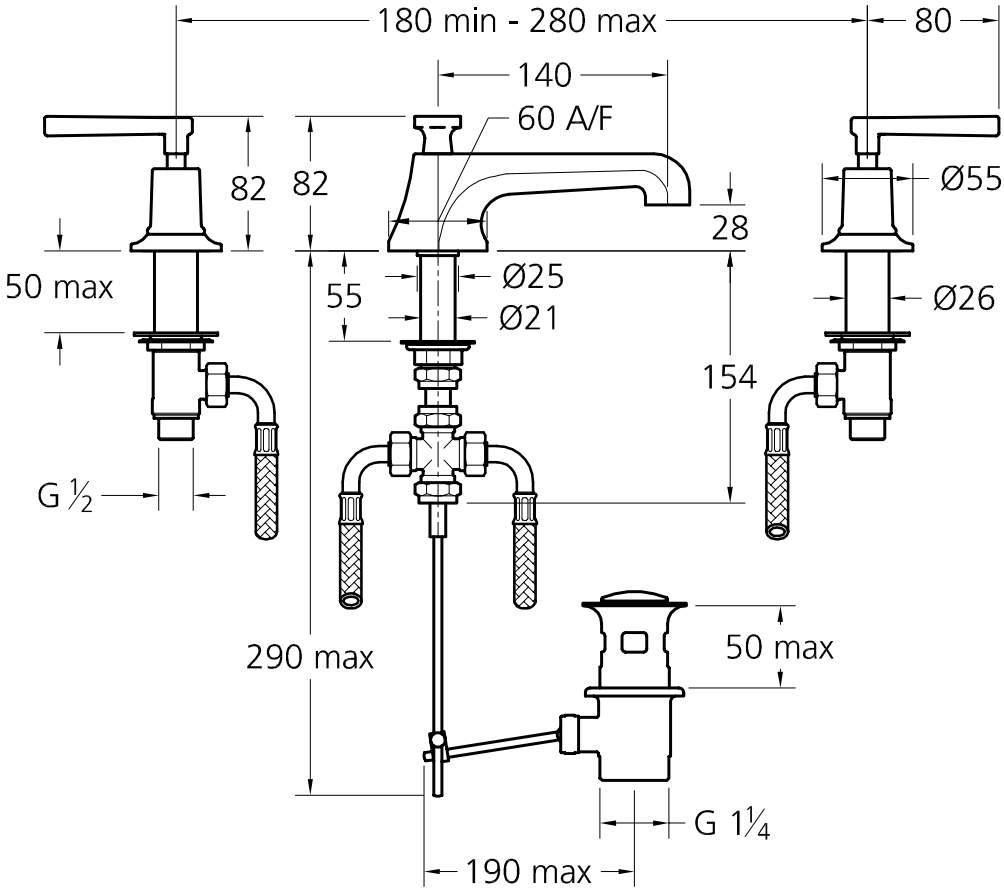

CATALOGUE ILLUSTRATION
Product Ref: ML1228
Revision: -
Issue: 020