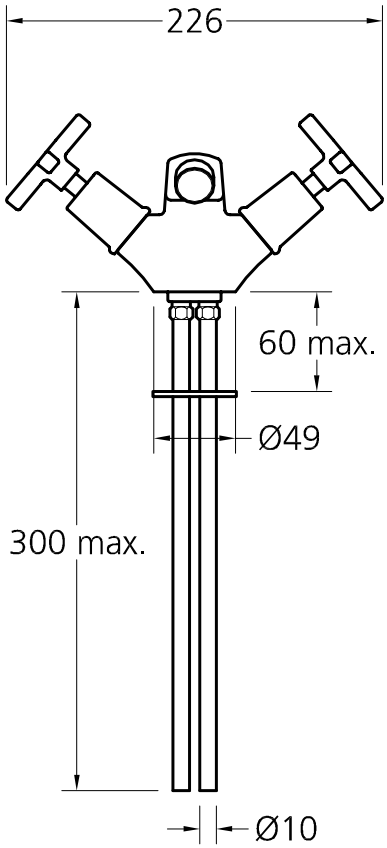

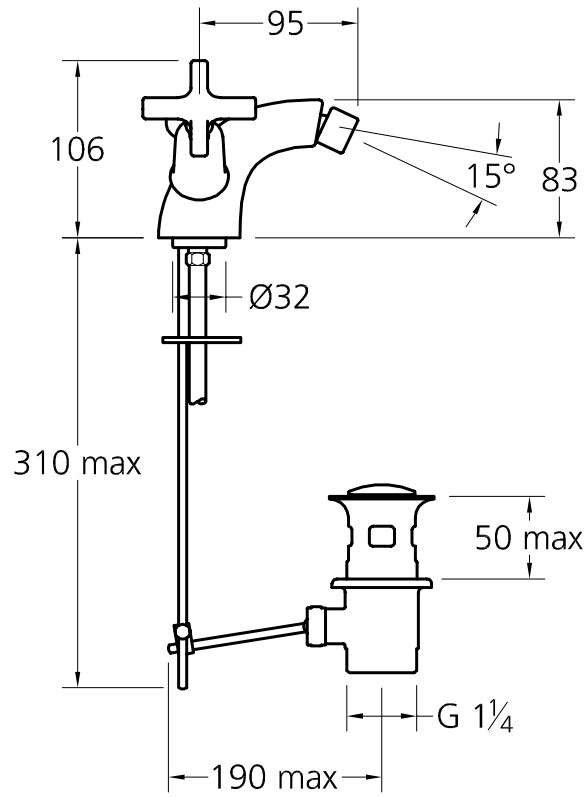

CATALOGUE ILLUSTRATION
Product Ref: MH1195
Revision: -
Issue: 020